Art. 9801/9802 Accessories for type 0 beam clamp

Technical specifications

- Item 9802xx: for the fastening of pipes or cables to the type 0 clamp
- Item 9801xx: for the fastening of threaded rods to the type 0 clamp
- Clamps and square nut material: steel, superficially treated with zinc flake
- Protective cap material: PP (Polypropylene), black

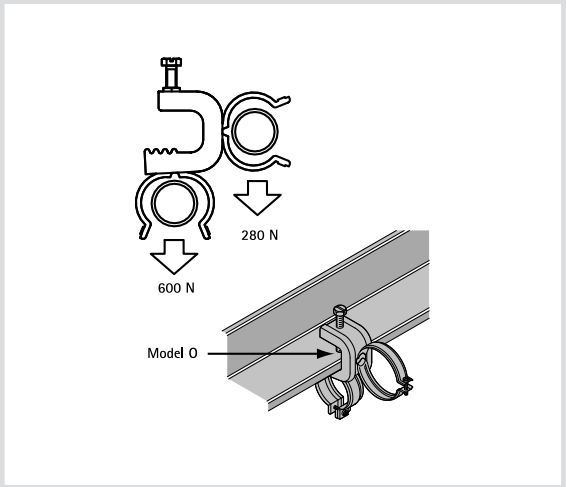

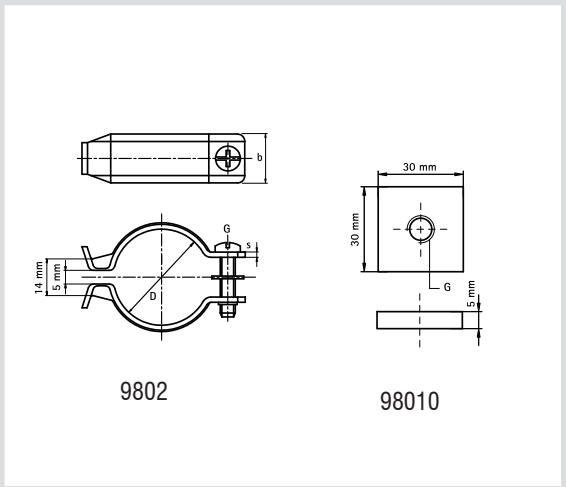

Code	D [mm]	G	b x s [mm]
980220	16,0 - 20,0	M5	16 x 1,5
980225	20,4 - 25,0	M5	16 x 1,5
980231	26,9 - 31,8	M5	16 x 1,5
980238	33,7 - 38,0	M6	20 x 1,5
980244	40,0 - 44,5	M6	20 x 1,5
980251	47,0 - 51,0	M6	20 x 1,5
980263	59,2 - 63,5	M6	20 x 1,5
980106	Square nut	M6	
980108	Square nut	M8	
980111	Protective cap		