Art. 820R CorRail cantilever arm - AISI 316

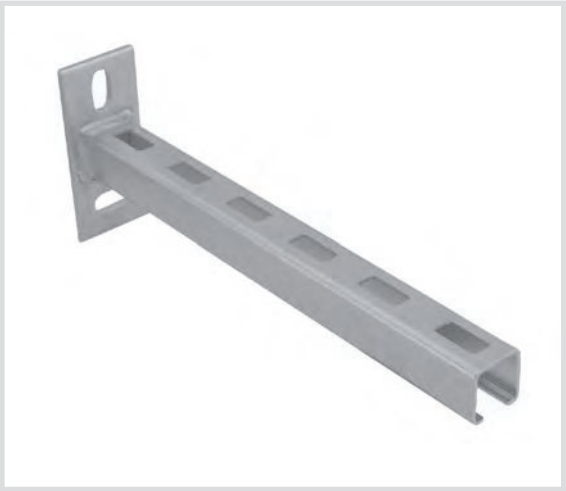

Technical specifications and advantages

- Made of AISI 316 stainless steel
- CO_2 welding
- Slots in the base at 90° for error-proof installation
- Graduated centimetre scale on one side

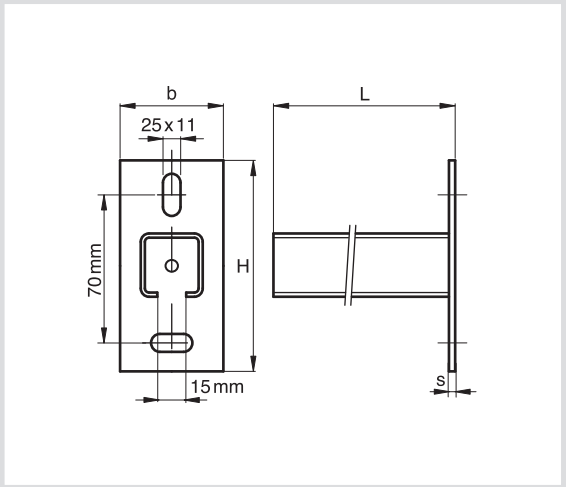

Code	L [mm]	Type Fixing rail	Da [mm]	H [mm]	b x s [mm]
820R30	300	CH2	30x30x2	110	48 x 5,0
820R50	500	CH2	30x30x2	110	48 x 5,0