Art. 639805 Wall-in support for washbasin with floor fixing - plasterboard

Technical specifications and advantages

- Material: steel
- Fully galvanised
- Includes screws and instructions for fastening
- Dimensions for correct positioning of suspended sanitary ware by the various manufacturers only inside the package
- Self-supporting structure to be positioned behind plasterboard walls or in front of masonry walls
- Suitable for all wall-hung washbasins
- Pre-assembled frame

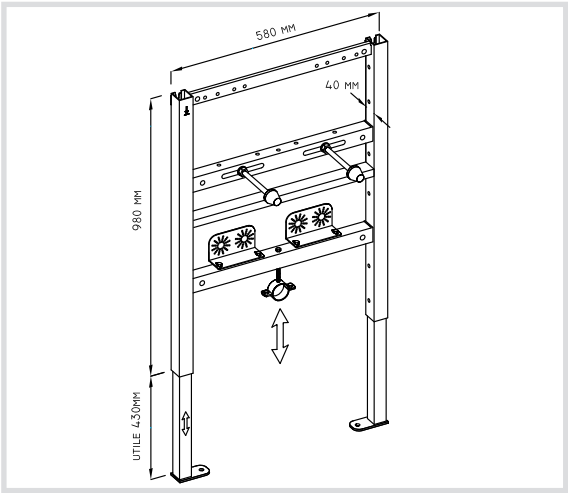

Code	Centre distance	Weight [kg]
639805	122/330	10,30