Art. 8600045 45° slotted angle bracket

Technical specifications and advantages

- Made with S235JR steel
- Hot-dip galvanised
- To create connections between fixing rails

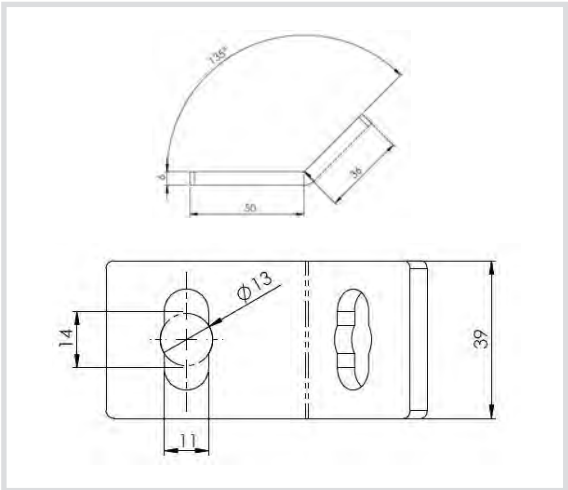

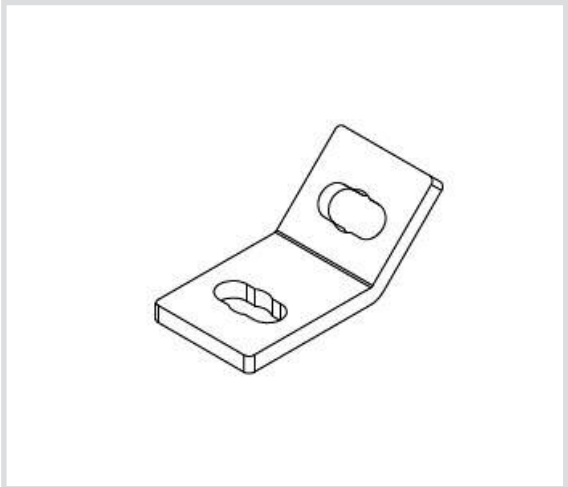

Code	Dimensions [mm]	Thickness S [mm]	Ø Holes [mm]
8600045	50x36	6,0	13