Art. 441 Collare isofonico con attacco M8/M10 - AISI 316

Pipe clamp with rubber lining M8/M10 - AISI 316

Caratteristiche tecniche e vantaggi

- Con dado M8/M10
- In acciaio Inox AISI 316
- Pre-montato con rondelle sulle viti laterali
- Gomma resistente all'invecchiamento

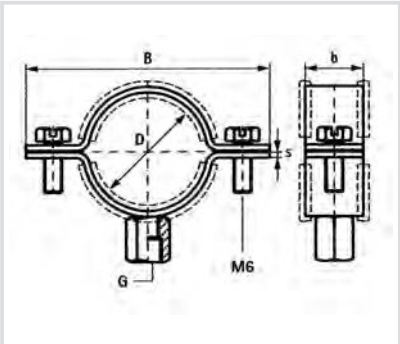

Codice	D [mm]	D ["]	G	b x s [mm]	B [mm]
441018	15-18	3/8	M8/M10	20x2,0	65
441021	20-24	1/2	M8/M10	20x2,0	69
441028	26-30	3/4	M8/M10	20x2,0	74
441035	32-36	1	M8/M10	20x2,0	81
441040	38-42	1 1/4	M8/M10	20x2,0	89
441048	47-50	1 1/2	M8/M10	20x2,0	100
441054	51-55	-	M8/M10	20x2,0	102
441060	60-64	2	M8/M10	20x2,0	114
441070	67-73	-	M8/M10	20x2,0	124
441075	75-80	2 1/2	M8/M10	20x2,0	130
441090	87-92	3	M8/M10	20x2,0	141
441100	100-106	-	M8/M10	20x2,0	165
441110	106-112	-	M8/M10	20x2,0	171
441115	114-119	4	M8/M10	20x2,0	180
441125	124-131	-	M8/M10	20x2,0	191