Art. 827X CorSTRUT cantilever arm - AISI 304

Technical specifications

- 90° slots to simplify assembly
- CO_2 welded
- In AISI 316 stainless steel

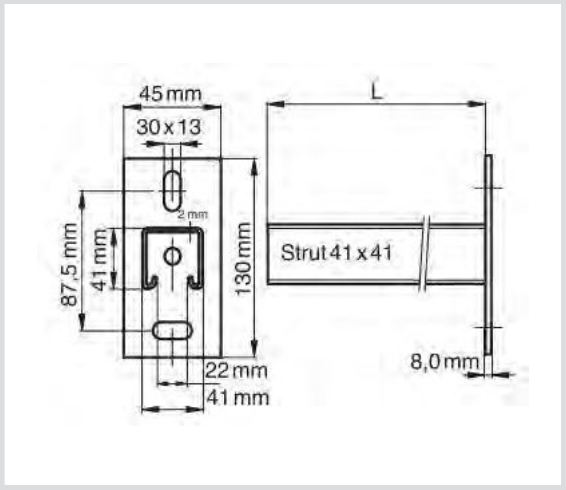
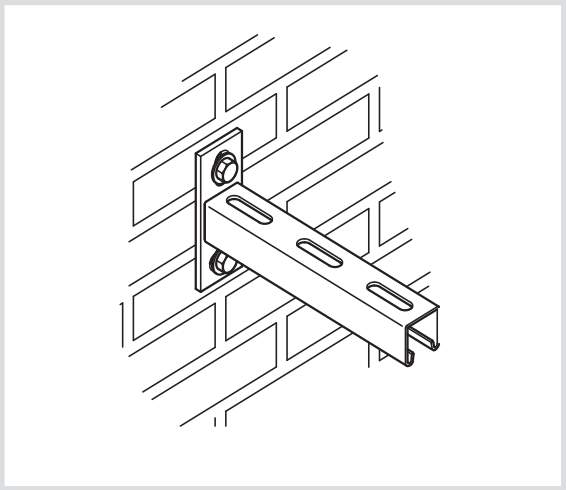
Code	L [mm]	For
827X200	200	STRUT 41x41
827X300	300	STRUT 41x41
827X450	450	STRUT 41x41
827X600	600	STRUT 41x41
827X750	750	STRUT 41x41