Art. 8636R CorSTRUT rail beam clamp - AISI 316

Technical specifications

- Made of AISI 316 stainless steel
- Always use 2 plates for each beam
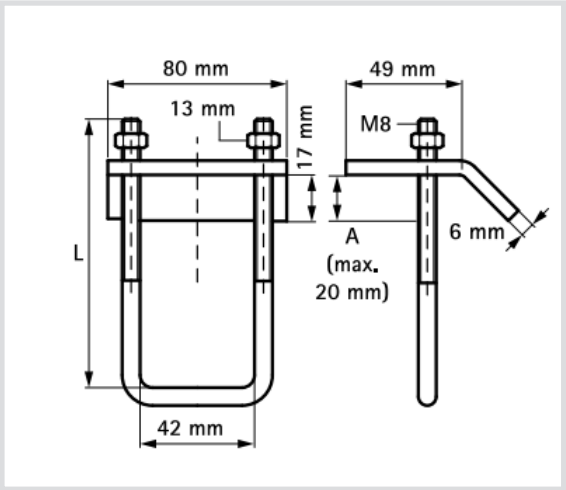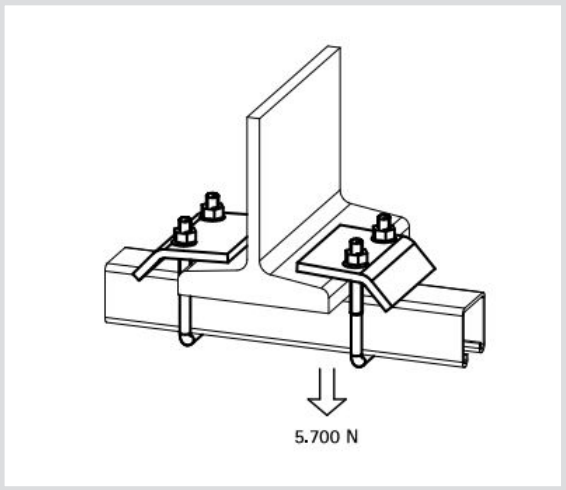
Code	A [mm]	L [mm]	For
8636R01	< 20	90	STRUT 41x21 and 41x41
8636R02			STRUT 41x62 and 41x82