Art. 3473R Male/female reduction - AISI 316

Technical specifications and advantages

- To widen or reduce the thread
- In AISI 316 stainless steel
- Tested for fire resistance

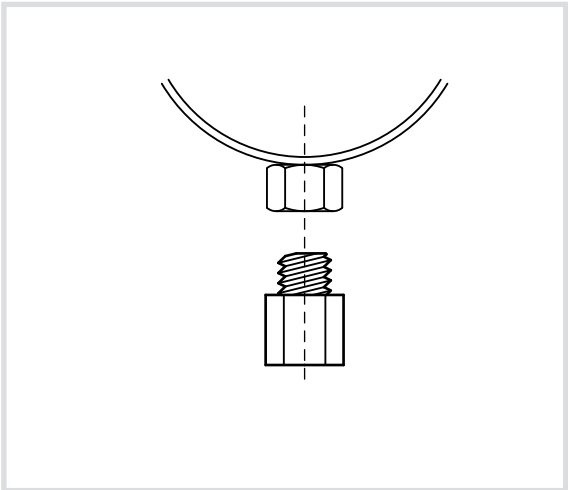
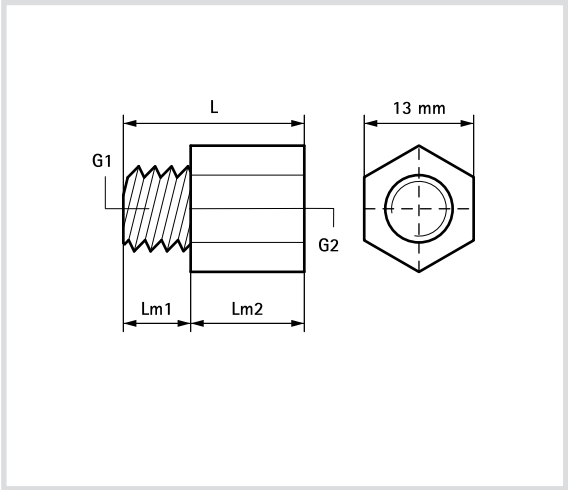
Code	L [mm]	G1	G2	Lm1 [mm]	Lm2 [mm]
3473R10	23	M8	M10	8,0	13,0
3473R08	21	M10	M8	8,0	11,0