Art. 860X90390° angle bracket with 3 holes - AISI 304

Technical specifications and advantages

- Made of AISI 304 stainless steel
- Slotted hole to simplify fixing

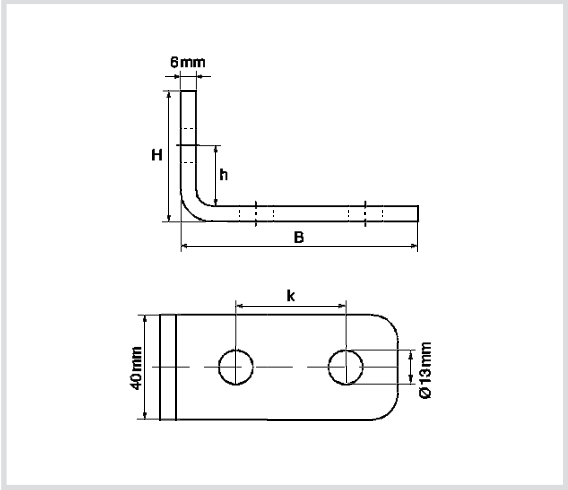

Code	BxH [mm]	Thickness S [mm]	Ø Holes [mm]	Slotted hole [mm]
860X903	95x57	6,0	13	22x10